K ± 2	K-45
400	355
500	455

AB SOMATHERM ARVIKA
Bangårdsgatan 1, SE-671 31 Arvika

info@somatherm.se
0570 - 72 77 50
somatherm.se

TKRD

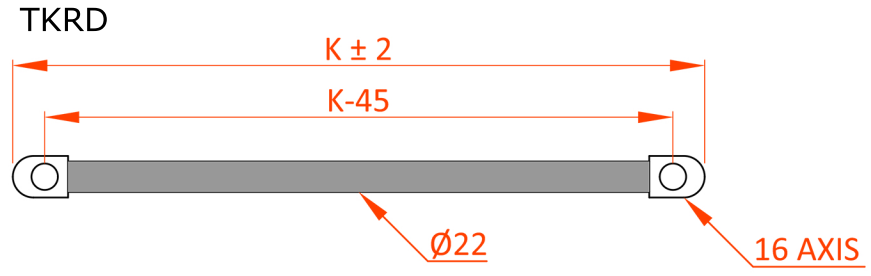

TKVD

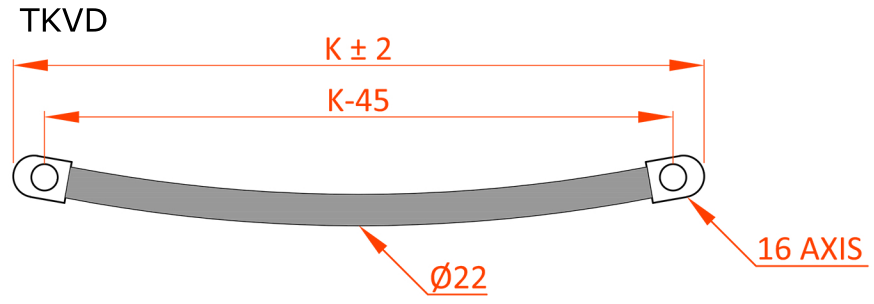

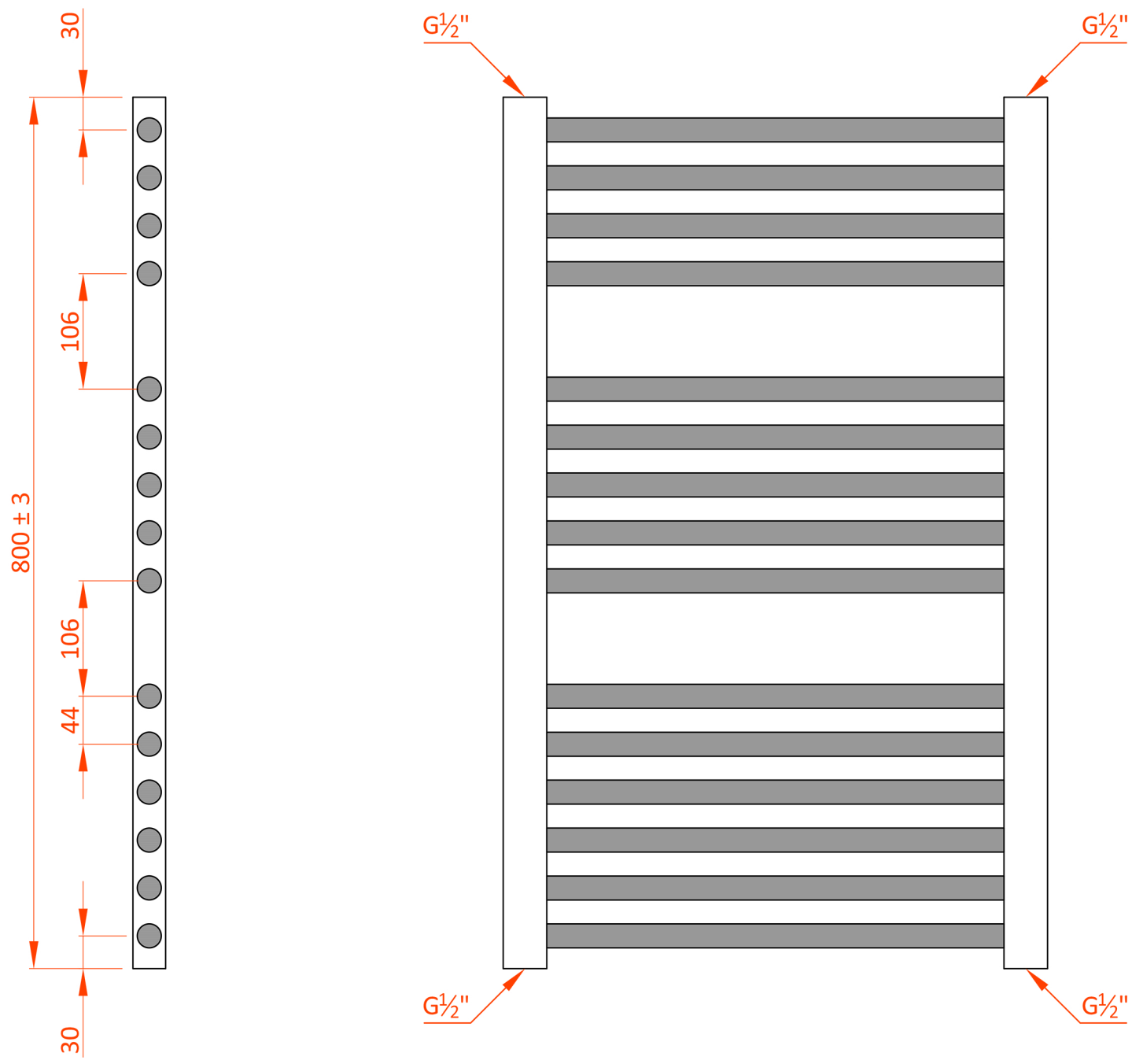

REVISION DESCRIPTION	REV. DATE	REV. DRAWN.	NO.

DRAWN.		-	DIMENSIONS	0 - 200 mm	200 - 500 mm	500 mm +	NET WEIGHT	-
CONTROL		-	TOLERANCE	± 0,5 mm	± 0,75 mm	± 1,00 mm	PİPE	4-5-6
APPROVAL		-	EXPLANATIONS	-			PUB. DATE	05.01.2017
SCALE	FIRM							
1/X	PRODUCT NAME	Glava TKRD-48, TKRD-58 | Rackstad TKVD-48, TKVD-58						
	PRODUCT CODE	-						