| K ± 2 | K-45 |
|---|---|
| 400 | 355 |
| 500 | 455 |

AB SOMATHERM ARVIKA
Bangårdsgatan 1, SE-671 31 Arvika

info@somatherm.se
0570 - 72 77 50
somatherm.se

TKRD

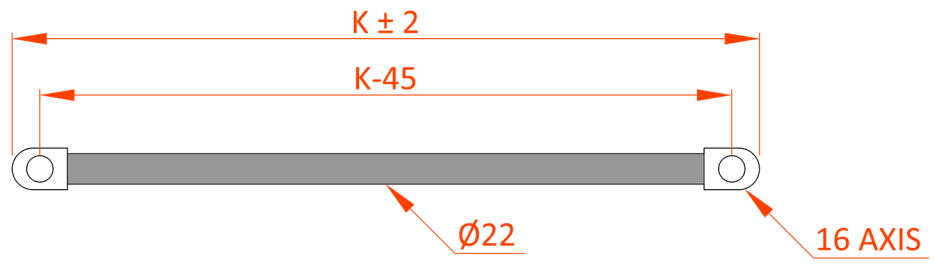


TKVD

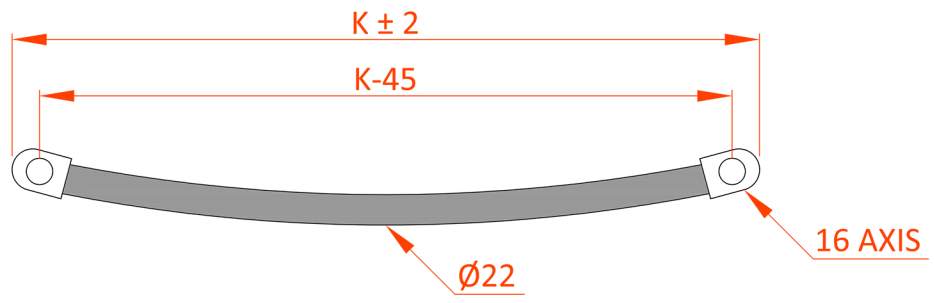


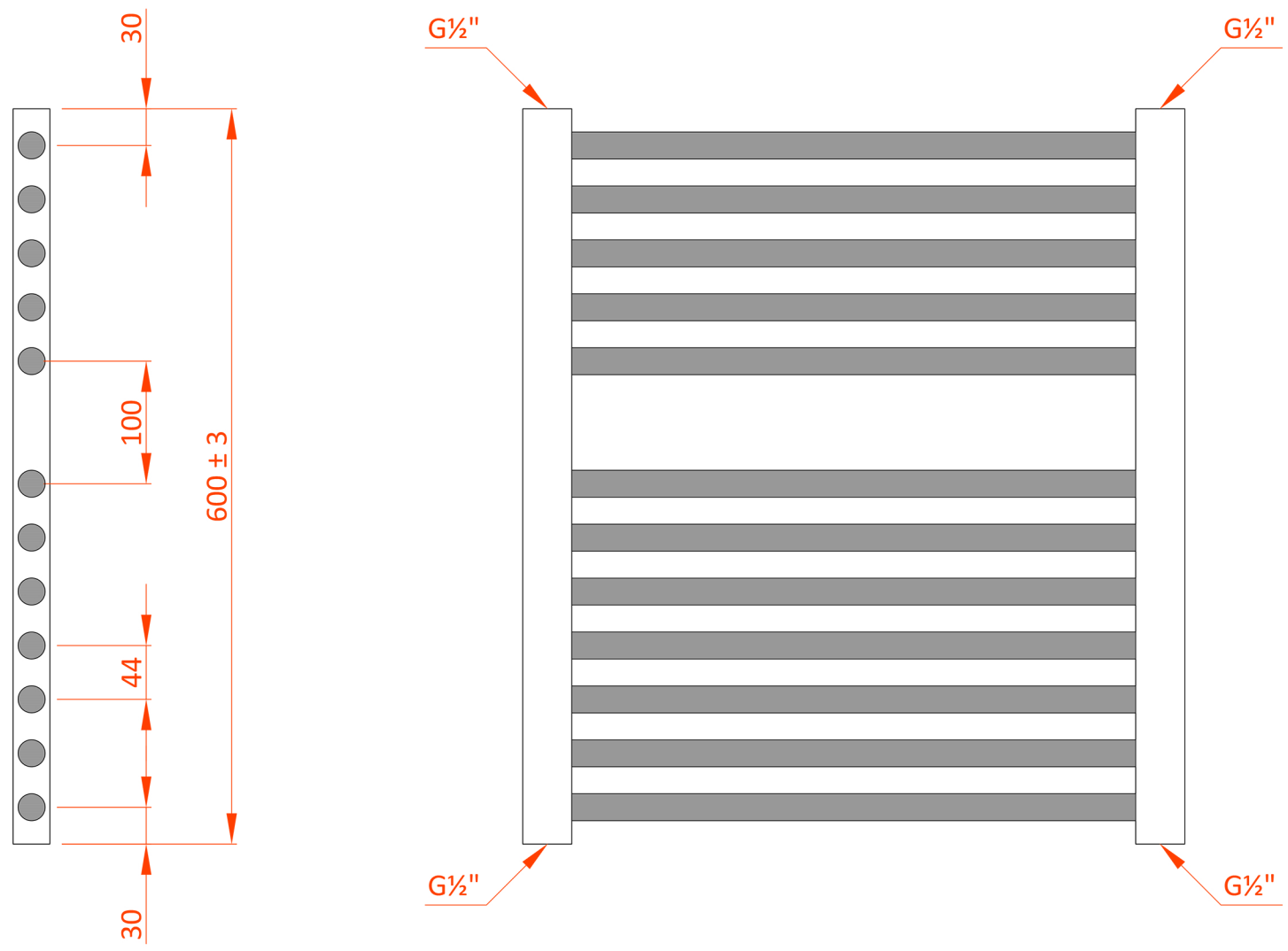


| | | | |
|---|---|---|---|
| | | 18,5 EKSEN TAPA, 16 EKSEN TAPA OLMUŞTUR | 12.10.2016 | | 01 |
| | | REVISION DESCRIPTION | REV. DATE | REV. DRAWN. | NO. |

| | | | | | | | | |
|---|---|---|---|---|---|---|---|---|
| DRAWN. | | - | DIMENSIONS | 0 - 200 mm | 200 - 500 mm | 500 mm + | NET WEIGHT | - |
| CONTROL | | - | TOLERANCE | ± 0,5 mm | ± 0,75 mm | ± 1,00 mm | PİPE | 5-7 |
| APPROVAL | | - | EXPLANATIONS | - | | | PUB. DATE | 05.01.2017 |
| SCALE 1/X | FİRM | | | | | | | |
| | PRODUCT NAME | Glava TKRD-46, TKRD-56 \| Rackstad TKVD-46, TKVD-56 | | | | | | |
| | PRODUCT CODE | - | | | | | | |